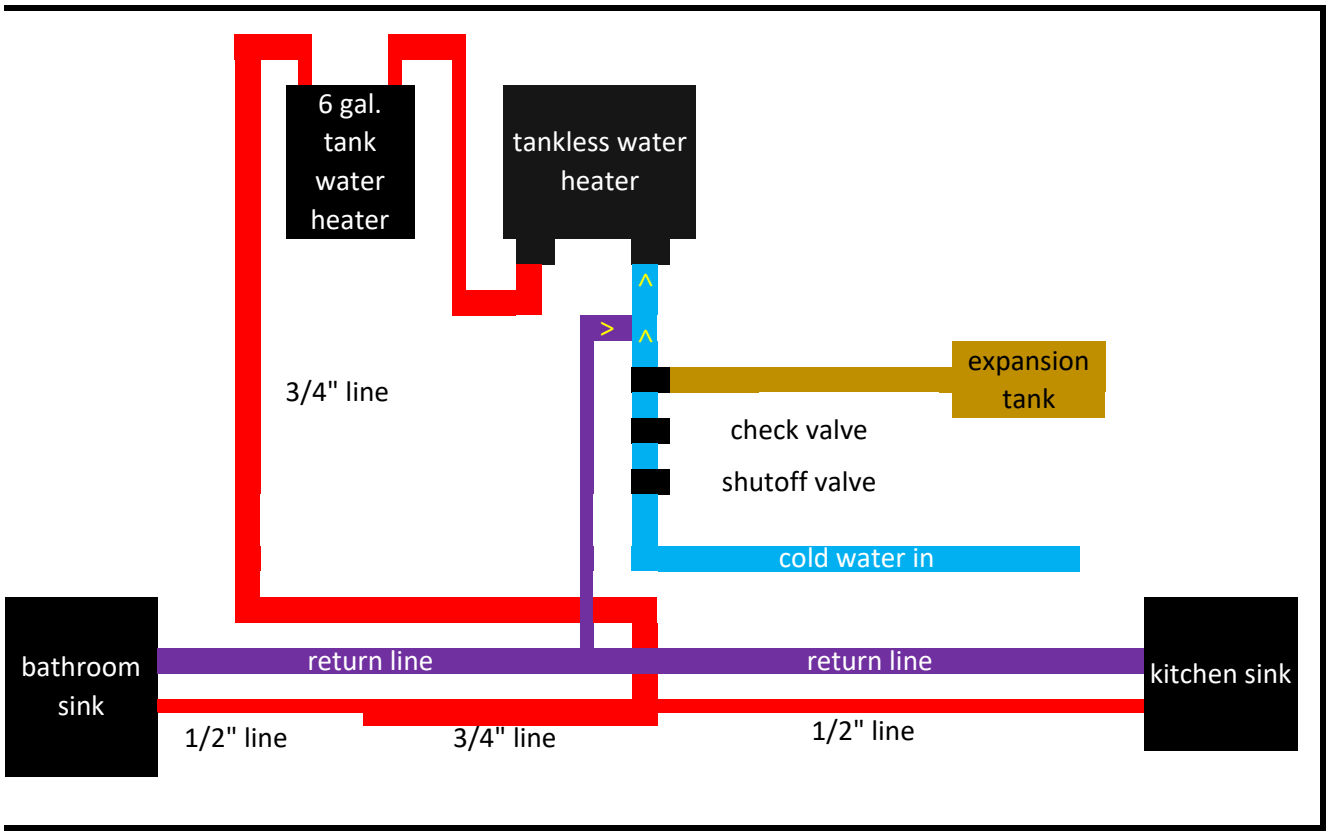
6 gal. tank water heater
tankless water heater
3/4" line
expansion tank
check valve
shutoff valve
cold water in
bathroom sink
return line
return line
kitchen sink
1/2" line
3/4" line
1/2" line